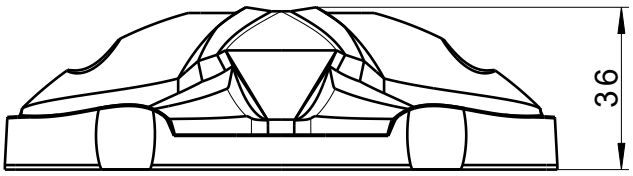
36

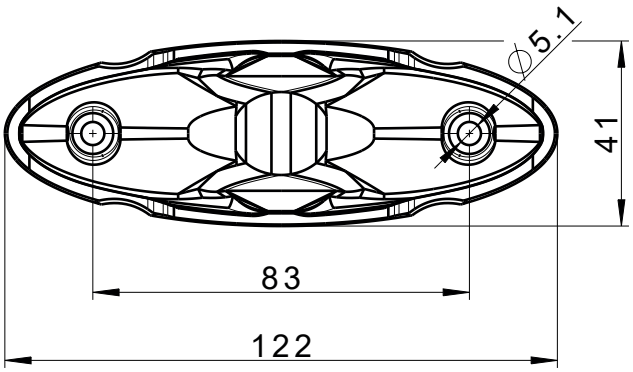
∅5.1
41
83
122

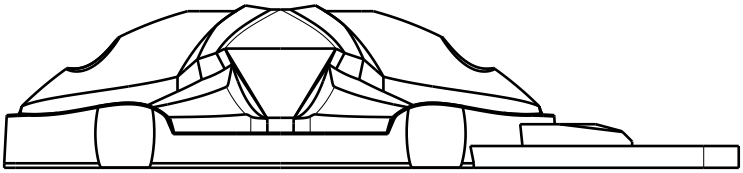

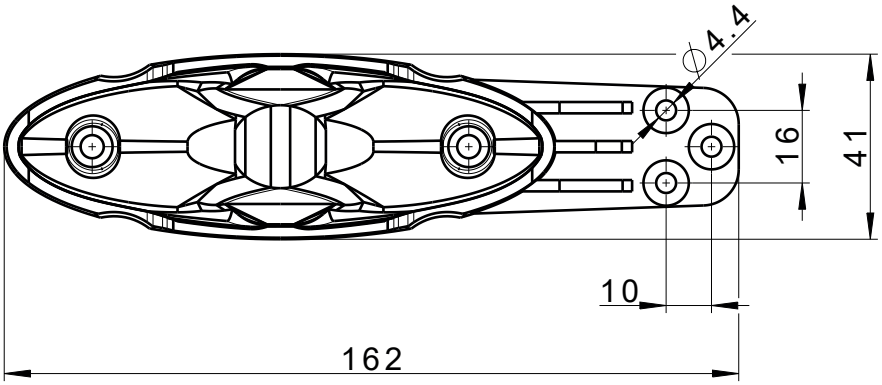
∅4.4
16
41
10
162

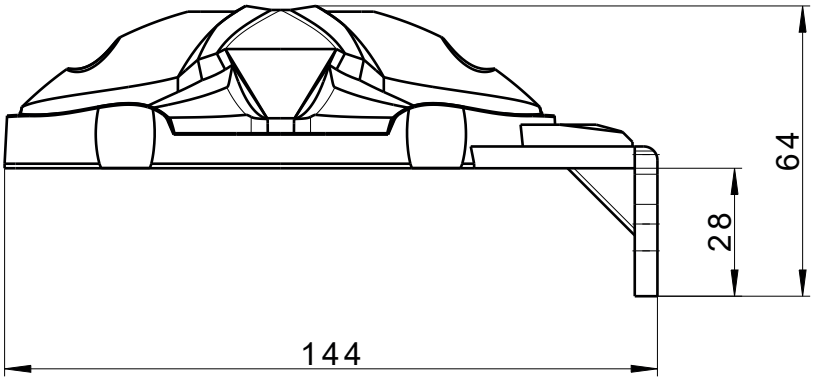
64
28
144

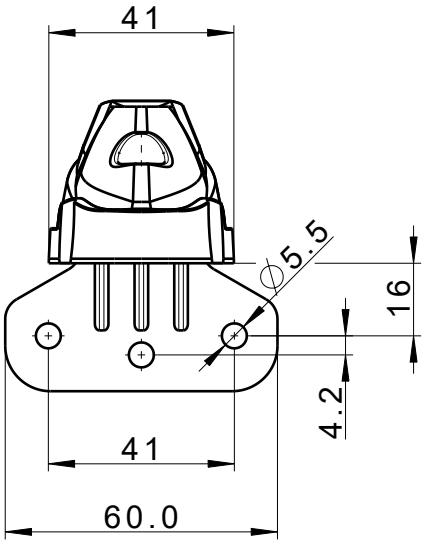
41
∅5.5
16
4.2
41
60.0