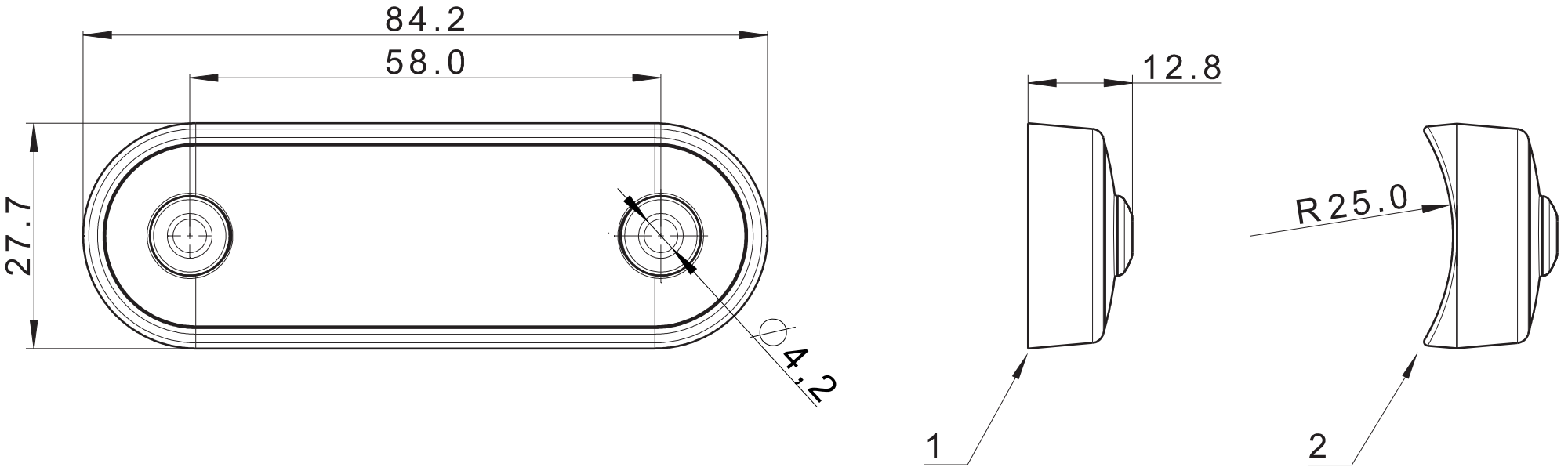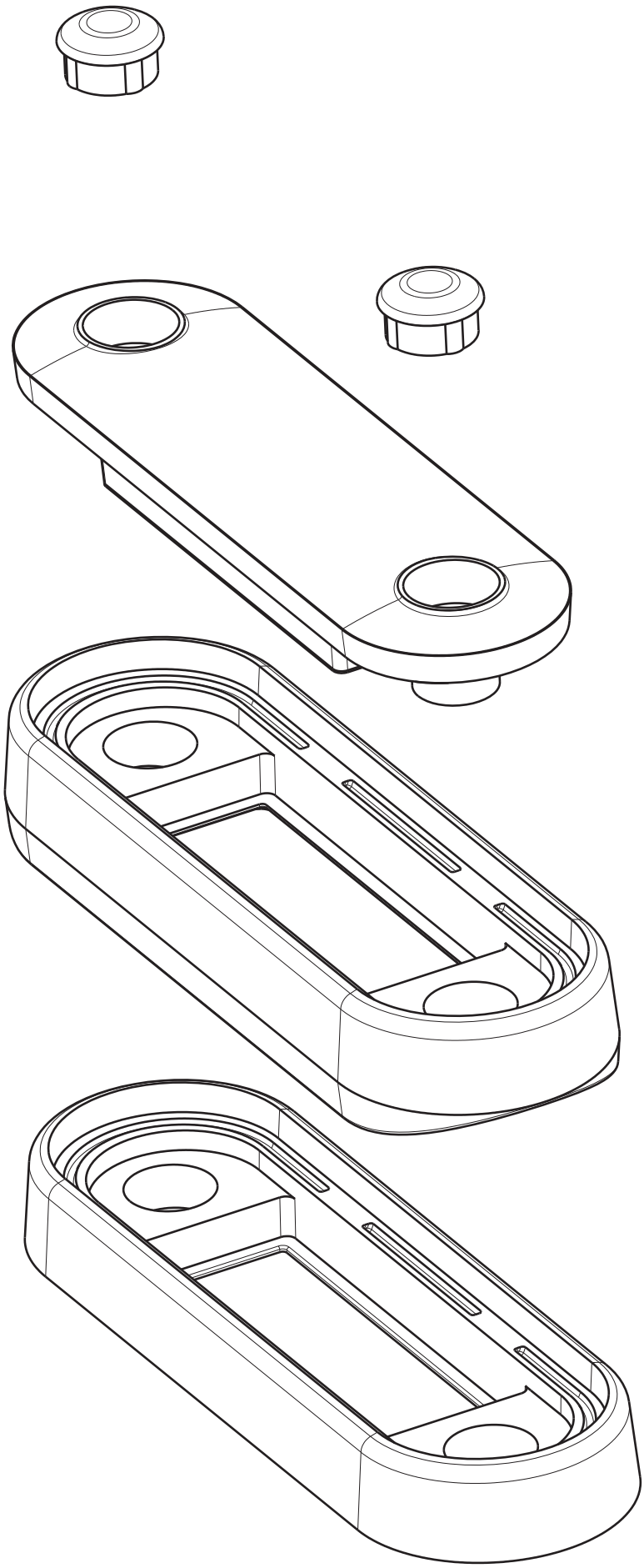
84.2
58.0
27.7
⌀4.2
12.8
R25.0
1
2